WREKIN
MAKE EVERY DAY BETTER

DMT0D4/7575/KH

Highway D400 manhole cover 750mm x 750mm clear opening with 100mm frame depth

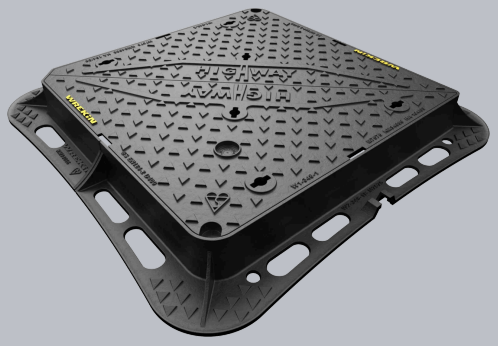

CHARACTERISTIC	VALUE
Range	Highway
Clear opening (mm)	750 x 750
Overall frame (mm)	965 x 965
Frame depth (mm)	100
Options	▸ Screw locking ▸ Standard badging ▸ Flood and odour control plate ▸ Safety grille ▸ ID and comms badging ▸ Pressure relief holes

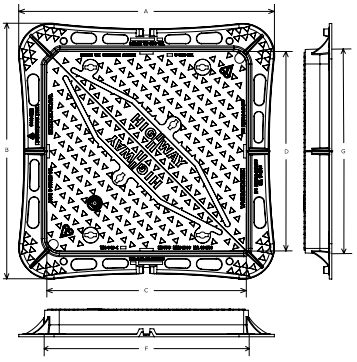

SPECIFICATION

GENERAL INFORMATION

Stock code	DMT0D4/7575/KH
Primary material	Ductile iron
Range	Highway
Category	Manhole cover
Flanges	4

STANDARDS, CLASSES AND GROUPINGS

Standards	BS EN 124-2 DMRB MCHW CD 534 v0.2.0
BS EN 124 Class	D400
BS EN 124 Group	4
Third party certified	Kitemark

PACKAGING AND HANDLING

Total Product Weight (kg)	92.9 kg
Full pallet quantity	10

DIMENSIONS

Frame shape	Square
Manhole shape	Square
Overall frame (A x B)	965 mm x 965 mm
Clear opening (C x D)	750 mm x 750 mm
Frame depth (E)	100mm
Base opening (F x G)	775 mm x 775 mm

Tel: 01543 440 440
Fax: 01543 440 444
info@wrekinproducts.com
wrekinproducts.com

bsi Manholes Drainage and Gully Tops KITEMARK™ KM 34066
bsi BES 6001 Responsible Sourcing of Construction Products CERTIFIED BES 830099
bsi ISO 9001 Quality Management Systems CERTIFIED ISO 14001 Environmental Management CERTIFIED FM 32898 EMS 758038
SGS UKAS MANAGEMENT SYSTEMS GB15/93883

EPD DATA

Total life cycle (cradle to grave) 238.79 kg CO_2 equivalent

BRE Global Verified EPD

Full LCA data available here

CCPI ASSESSED

CCPI
ASSESSED PRODUCT INFORMATION
011200223/0428
Ductile Iron Access Covers

FEATURES

- Enlarged corners spread loads evenly across the foundation, enhancing reliability and lifespan.
- Optional ID badge supports RFID, NFC and IoT connectivity for asset identification and tracking.
- Safety keyways are configured to support engagement of lifting keys during handling and lifting operations.
- Independently tested by a UKAS-accredited laboratory to achieve a PSRV value of 70-84 on the chequer surface.
- Gussets distribute loading stresses within the frame and bedding material under load.
- Directs forces vertically to convert traffic loads into mortar-compatible compression forces.
- Indexed corners ensure correct orientation and alignment first time, every time.
- Integrated keyway frame lifting points provide a lifting interface for use with compatible lifting keys during cover removal.
- Frame holes allow mortar to flow through the flange, creating a strong mechanical bond for added stability.
- Texturing above and below the flange improves mortar grip and reduces lateral movement and cracking.
- Non-rocking three-point suspension provides stable seating for silent, reliable operation.
- Complies with CD 534 v0.2.0.

AVAILABLE OPTIONS

- **Screw locking**
  Screw locking deters unauthorised access to the chamber. An extended shank socket set is required to engage the locking screw.
- **Industry standard badging**
  Integral industry-standard badging e.g. SW (Storm Water) and FW (Foul Water). Details are taken at point of order.
- **Flood and odour control plate**
  The flood and odour control plate is manufactured from steel and is used to limit flood-water ingress and chamber odour egress.
- **Safety grille**
  Safety grilles prevent accidental chamber falls. Available in a variety of configurations; including bars and mesh as drop-in or hinged.
- **ID badging and communications options**
  Bespoke badging and communications antennae, including NFC, RFID and IoT technology.
- **Pressure relief holes**
  Pressure relief holes provide additional airflow, with sizes permitted up to the maximum allowances specified in BS EN 124.

ACCESSORIES

Tel: 01543 440 440
Fax: 01543 440 444
info@wrekinproducts.com
wrekinproducts.com

bsi Manholes Drainage and Gully Tops KITEMARK™ KM 34066
bsi BES 6001 Responsible Sourcing of Construction Products CERTIFIED BES 830099
bsi ISO 9001 Quality Management Systems CERTIFIED FM 32898 ISO 14001 Environmental Management CERTIFIED EMS 758038
SGS UKAS MANAGEMENT SYSTEMS GB15/93883

STOCK CODE	DESCRIPTION
PC/UNIFORM/151076	Uniform chamber adjustment unit 760mm x 100mm x 15mm
KEYS/L	Small cover combined lifting key
PC/UNIFORM/251076	Uniform chamber adjustment unit 760mm x 100mm x 25mm
PC/UNIWEDGE/755012	Uniform support wedge 120mm x 50mm x 75mm
YPCR/U12.5	12.5Kg Unipak® rapid curing polyester resin mortar
YPCR/U25	25Kg Unipak® rapid curing polyester resin mortar
GRITBLOCKER	Anti-blockage keyway insert
SCREWLIFT	Simple and rapid ironwork frame levelling system. Simply push the bushes into the holes in the flange and adjust the levelling screws to the required height.
KEYS/LONG	Large cover lifting keys with a long handle

- All information provided is subject to change without notice. While every effort is made to ensure accuracy and relevance, Wrekin Products Ltd. does not warrant the completeness or reliability of the information contained herein. Photographs, illustrations, and other visual materials are provided for illustrative purposes only.
- Wrekin Products Ltd. reserves the right to make design amendments or improvements to any product at any time, where such changes enhance performance or durability, without affecting compliance with the stated standards.
- Where errors or omissions are identified, amendments will be made as quickly as possible.
- It is the responsibility of all users to satisfy themselves the above data is current.
- All values stated are nominal within 2.5% tolerance.
- Installation details are available in the knowledge base.
- All Wrekin products are supplied subject to our terms and conditions of sale.
- If you require further technical details beyond those available on this datasheet, please contact us.

Tel: 01543 440 440
Fax: 01543 440 444
info@wrekinproducts.com
wrekinproducts.com

bsi Manholes Drainage and Gully Tops KITEMARK™ KM 34066
bsi BES 6001 Responsible Sourcing of Construction Products CERTIFIED BES 830099
bsi ISO 9001 Quality Management Systems CERTIFIED FM 32898 ISO 14001 Environmental Management CERTIFIED EMS 758038
SGS UKAS MANAGEMENT SYSTEMS 0065 GB15/93883